TH300

Programmable temperature, Humidity controller

- Touch panel color LCD screen
- Precise control
- 100 patterns (Total 2,000 segments, 100 SEG / PTN)
- Temperature / humidity independent PID control
- Various alarm functions
- Digital input (DI) 4 contacts, digital output (DO) 12 contacts
- Communication function
  (RS232 or RS485, selected by the suffix code)

Suffix code

Model	Code		Description
TH300	□	□	Programmable Temperature&Humidity controller (DIN 96 × 96)
Communication	1		RS232C communication
	2		RS485 / 422 communication
Language (optional)		1	Korean and English (Standard type)
		2	English and Chinese (Simplified Chinese Characters)
		3	English and Chinese (Traditional Chinese Characters)

Specification

Input

Temperature sensor (Dry)	RTD (Pt100 Ω) or 0 – 5 V DC ※ 4 – 20 ㎃ DC (external resistance 250 Ω) ※ Pt100 Ω (IEC 751)
Humidity sensor (Wet)	
Sampling time	500 ㎳
Measurement range	Temperature : –100.0 ~ 500.0 ℃
	Humidity : 0.0 ~ 100.0 % RH
Digital Input (DI)	4 contacts (1a × 4)

Function

Display accuracy	Temperature : ±0.2 % of FS Humidity : ±2 % of FS
Insulation resistance	500 V DC min 10 ㏁ (between the primary and secondary terminal, between the primary / secondary terminal and earth terminal)
Dielectric strength	2500 V AC 50 / 60 ㎐ (between the primary and secondary terminal)

Operation environment

Ambient temperature	0 ~ 50 ℃
Ambient humidity	20 ~ 90 % RH (without dew condensation)
Storage temperature	-25 ~ 70 ℃
Vibration resistance	10 - 55 Hz, amplitude 0.75 ㎜, 3 directions 4 times, 5 min/cycle.
Shock resistance	147 ㎧, 3 directions 3 times.
Dimension	96(W)×96(H)×100(D)
Weight	approx. 582 ㎏ (body + fastener)

Standard specification

Power supply voltage	100 - 240 V AC, voltage fluctuation : ±10 %
Power frequency	50 - 60 ㎐
Power consumption	10 VA max
Ambient temperature	0 ~ 50 ℃
Ambient humidity	20 ~ 90 % RH (No dew condensation allowed)
Storage temperature	-25 ~ 70 ℃
Vibration resistance	10 - 55 Hz, amplitude 0.75 ㎜, 3 directions for 4 times, 5 min/cycle
Shock resistance	147 m/s^2, to 3 directions for 3 times
Dimension	96(W) × 96(H)
Weight	Approx. 850 g (included the weight of box)

Monitor specification

Screen rating	TFT LCD (70.08 × 52.56 ㎜ : 3.5″)
Number of Pixels	320 X RGB X 240
Back light	Edge Light LED B/L
Back light life expectancy	Approximately 40,000 hours
Touch type	Register type (4 wires)
Language	Korean/English, Korean/Chinese (Simplified Chinese Characters, English/Chinese (Traditional Chinese Characters). *selected by the suffix code

Communication

Applicable rating	EIA-RS232C, RS485/422	
Max number of connection	RS232C	1 : 1
	RS485/422	32 devices max (includes the master). ※ address 1 ~ 999
Communication type	RS232C	Full Duplex
	RS485/422	2 wires type half duplex
Synchronous type	RS232,485/422	Asynchronous mode
	RS232C	Approx. within 10 m
	RS485/422	Approx. within 1.2 ㎞
	RS232C,485/422	9600 / 19200 / 38400 bps
Data Length	RS232C,485/422	7/8 Bits
Parity Bit	RS232C,485/422	NONE / EVEN / ODD
Stop Bit	RS232C,485/422	1 / 2 Bit (s)
Protocol	RS232C,485/422	PCLINK / PCLINK + CRC / MODBUS-RTU
Response Time	RS232C,485/422	0 – 999 ㎳

Output

Control output (OUT)	SSR	ON : 24 V DC pulse voltage, OFF : below 0.1 V DC Pulse voltage (resistive load above 800 Ω)
		Cycle time : 1 ~ 1000 sec
Retransmission output (RET)	Temperature	4 – 20 ㎃ DC (resistive load 600 Ω max)
	Humidity	present value (PV), output amount (MV), set value (SV) ※by the internal selection
	Resolving power	7000 max (regarding 4 – 20 ㎃)
	Renewal time	500 ㎳
Digital output (DO)	Relay	8 contacts (1a X 8 contacts) N.O : 30 V DC 5 A, 240 V AC 5 A
	Transistor	4 contacts (Open collector output). 24 V DC 300 ㎃ max

Function

Input	Input compensation	Temperature : −100.00 ~ 100.00 ℃ Humidity : −100.0 ~ 100.0 % RH
	Dry/wet bulb sensor compensation	Compensate the difference between the wet and dry bulb sensor after removing the wet bulb sensor gauze.
	Scaling	DC Voltage (V DC) : Input scaling depending on the range variation.
	Input filter	1 ~ 180 sec
	Input break detection	UP scale (in case of the RTD input), Operation stops when exceeding ±5 % of the range limit.
Control mode	Operation method selection	Constant value control/program control selectable.
Control action	Pattern	100 patterns (100 segments/1 pattern)
	Segment	2,000 segments max.
	PID group	16 group (temperature 4 zones x humidity 4 zones)
	Auto tuning	Auto tuning depending on the target set value.
	Proportional band	0.00 ~ 600.00 ℃ (ON / OFF control when value is 0.00)
	Integral time	0.0 ~ 6,000 sec (OFF state when time is set to 0)
	Derivative time	0.0 ~ 6,000 sec (OFF state when time is set to 0)
	ON/OFF control	Set the proportional band to 0.0
	Direct/reverse control	Depends on the direct/reverse action of control output.
	Hysteresis	0.1 ~ 600 ℃ (with humidity, wet bulb temperature or replaced value)
Retransmission output	Temperature·humidity	4 – 20 ㎃ DC select among the present value(PV), set value(SV), and output amount (MV)
	Scaling	Automatically scales the high and low range (4 – 20 ㎃ DC).
Alarm setting	Set alarm	System alarm : 4 contacts. Alarm 4 contacts per pattern
	Alarm type	High/low alarm, low deviation alarm and etc (20 kinds)
	Absolute alarm	Temperature : −100.00 ~ 500.00 ℃ Humidity : 0.0 ~ 100.0 % RH.
	Deviation alarm	Temperature : −600.00 ~ 600.00 ℃ Humidity : −100.0 ~ 100.0 % RH.
	Hysteresis	Temperature : 0.0 ~ 600.0 ℃ Humidity : 0.0 ~ 100 % RH.
Power backup memory	Saving device	Internal flash and FRAM, Temperature / Humidity each 86,400 point.
	Saving function	Save and restore the program information and set value and save the temperature humidity set value and indication value

Dimension and panel cutout (unit : ㎜)

● Dimension

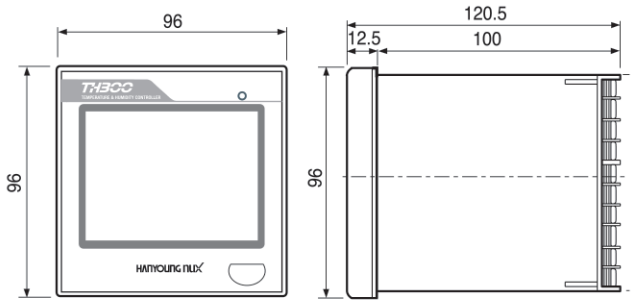

● Panel cutout

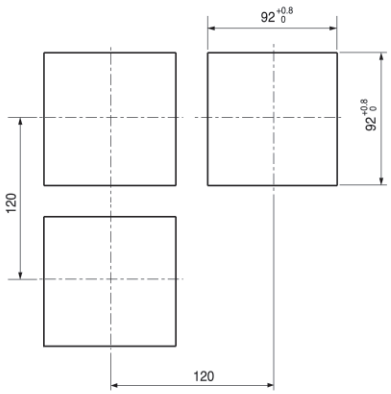

Connection diagram